PRODUCT DATA SHEET

CORE – I6004

Appearance & Shape: To be free from any defect such as flow, burrs, unevenness etc; as per IEC standards

Effective parameters irrespective of material grade (per piece)		
Approx. Weight (without gap)	26	g/pc.

I6004 (OL)

Material Grade	Initial Permeability (μ_{iac})	Ordering code
CF139	2100 ±20%	CF139 I6004 OL
CF297	2300 ±20%	CF297 I6004 OL

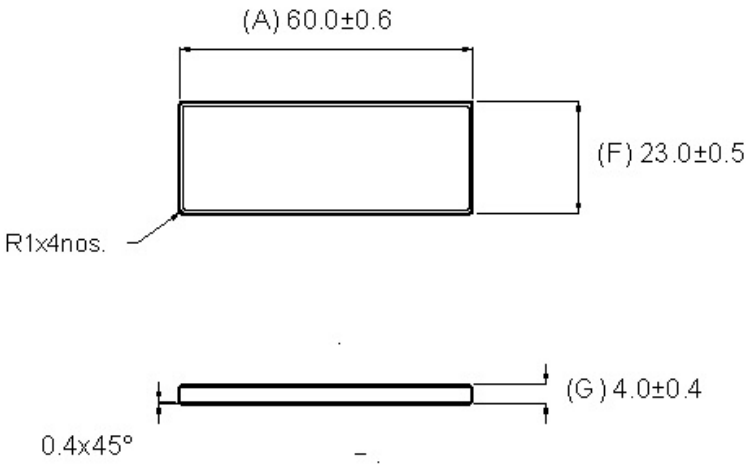

Regd. Office & Works: Jabli, Distt. Solan, Himachal Pradesh – 173 209 (India)
E-mail: sales@cosmoferrites.com